2027 FLORIDA LINEMAN COMPETITION

FEBRUARY 26-27 · KISSIMMEE

JOURNEYMAN EVENT

12 kV Pin Insulator Replacement

Chief Judge: Dwayne Goosetree — LAKELAND ELECTRIC, POWERED FOR LIFE

Mean time: 8 minutes
Drop Dead: 11 minutes

Event Summary

Teams will lay out an energized phase of primary on a 12 kV-2 phase line on a crossarm in order to replace the pierce pin and insulator using rated hot sticks, lay out arm, etc. You can choose which insulator to change but they will be marked.

A Baker Board cannot be used for this event and Extendo sticks are not acceptable for any part of this event!

Event Specifications

- Teams will be allowed a 5-minute set-up time before the start of the event.
- Rubber gloves will be required ground to ground.
- Time starts at judge's signal with fall arrest detached from the pole.
- Neutral wire and spool must be covered; it can be floated but upset bolt must remain in pole.
- Primary wire and insulator on other end of arm must be covered while changing insulator
- Any energized wire or part of tool within MAD must be covered while changing insulator.
- Any/all sticks and tools must be marked showing MAD and will be checked
- Crossarm cover must be used while untying and tying wire on insulator.
- 2 rated sticks and both Lineman must be utilized to move wire in and out, shotgun sticks are not acceptable.
- Old preformed tie and rubber grommet must be removed using hot sticks.
- Old rubber grommet can fall to the ground but" Headache" must be called.
- New preformed tie and rubber grommet must be used and installed using hot sticks.
- New rubber grommet can fall to the ground and must be installed for the changeout to be complete. If new grommet falls to the ground, you must call" Headache"
- Old/new pin and insulator will be marked and must be changed.
- When completed, all equipment and covering must be sent to the ground and lying on the tarp.
- 1st Lineman must be completely off the pole before handline can be dropped out!
- Time stops when last Lineman has both feet on the ground.
- Material must be broken down/put back in order prior to leaving or it will be a deduct

Materials Provided

- Pierce pin and F-neck Pin Insulator
- PLP preformed tie Cat# UTF-1204

Team Provides

- Tarp, handline, personal tools etc.
- Cover-up
- Rated hot sticks or tools

SPONSORED BY:

PLP®

FMEA FLORIDA MUNICIPAL ELECTRIC ASSOCIATION

KUA® KISSIMMEE UTILITY AUTHORITY

2027 FLORIDA LINEMAN COMPETITION

FEBRUARY 26-27 · KISSIMMEE

JOURNEYMAN EVENT

12 kV Pin Insulator Replacement

APPLICATION	TANGENT, 0-3 DEG, 2 PH W/NEUT, 8-FT LIGHT WOOD XARM, WOOD POLE

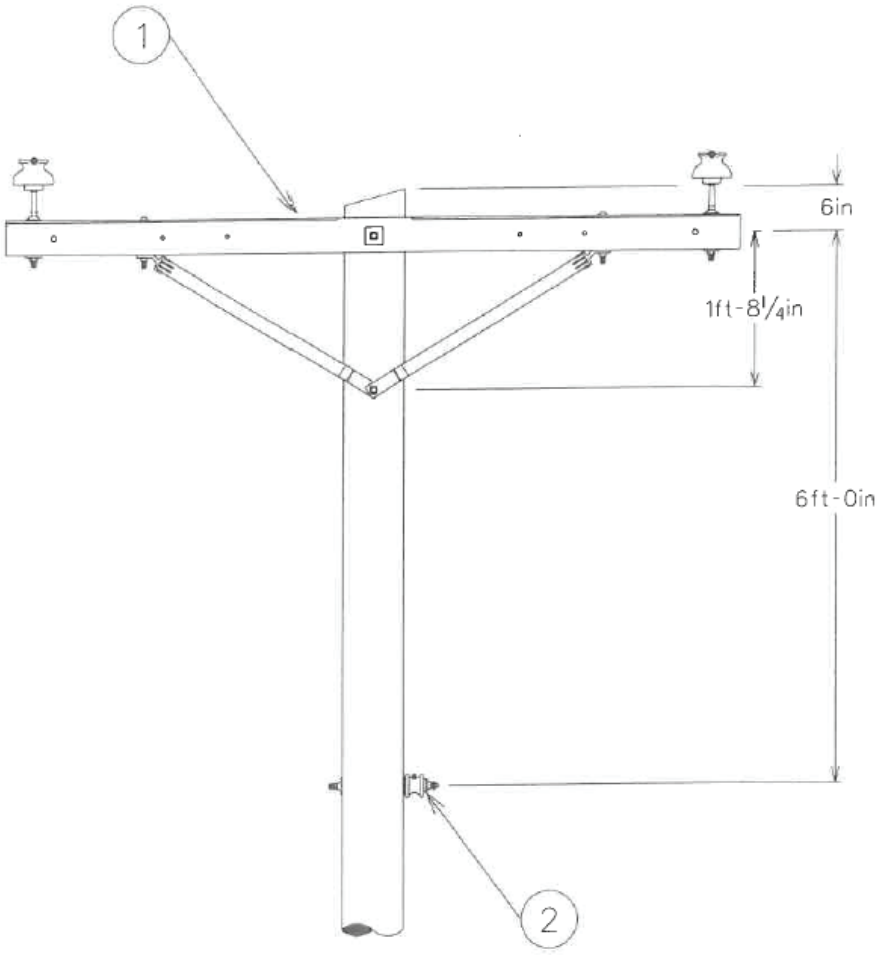

FLORIDA MUNICIPAL ELECTRIC ASSOCIATION

KUA KISSIMMEE UTILITY AUTHORITY

2027 FLORIDA LINEMAN COMPETITION

FEBRUARY 26-27 · KISSIMMEE

JOURNEYMAN EVENT

Insulator Change Out De-Energized

Chief Judge: Alvin Moore GRU More than Energy

Co-Chief: Brad Thomas GRU More than Energy

Mean time: 3 minutes

Drop Dead: 6 minutes

Event Summary

This event is a dead and grounded event. Teams will be required to change out both insulators, pins, preform ties **AND** rubber grommets on a 2-phase line framed on an 8' wooden crossarm.

Event Specifications

- Teams will be allowed a 5 minute set up time.
- Work gloves are required during both set up and while running event.
- Time starts at judge's signal with fall arrests detached from the pole.
- You may headache the old grommet from the pole but MUST yell headache.
- If you drop the new grommet, you will not be gigged as long as you yell headache, and it must be sent back up on the handline.
- 1st Lineman must be completely off the pole before handline can be dropped out!!
- All other general rules apply.
- Time stops when second lineman has both feet on the ground.
- Material must be broken down and put back like it was, this can be after the time has stopped. But you will still be judged during this time.
- All material must go up and down in a nose bag.

Materials Provided

- F-neck Pin Insulator
- PLP preformed tie Cat#UTF-1204
- 2 Pins
-

Team Provides

- Tarp, handline, personal tools etc.

SPONSORED BY:

PLP®

FMEA FLORIDA MUNICIPAL ELECTRIC ASSOCIATION

KUA KISSIMMEE UTILITY AUTHORITY

2027 FLORIDA LINEMAN COMPETITION
FEBRUARY 26-27 · KISSIMMEE

JOURNEYMAN EVENT

INSULATOR CHANGE OUT DE-ENERGIZED

APPLICATION	TANGENT, 0-3 DEG, 2 PH W/NEUT, 8-FT LIGHT WOOD XARM, WOOD POLE

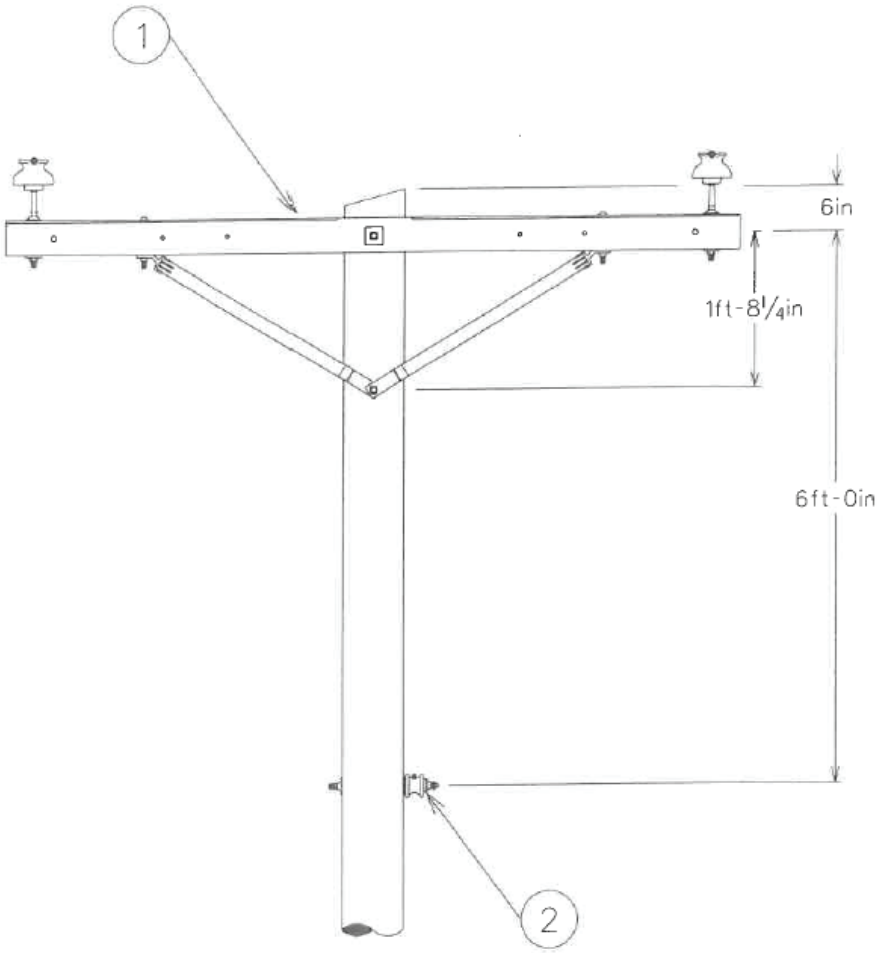

FMEA FLORIDA MUNICIPAL ELECTRIC ASSOCIATION

KUA KISSIMMEE UTILITY AUTHORITY

2027 FLORIDA LINEMAN COMPETITION

FEBRUARY 26-27 · KISSIMMEE

JOURNEYMAN EVENT

Vertical Hurtman Rescure

Chief Judge: Zeus Roberts

BEACHES | ENERGY SERVICES

Mean time: 3 minutes
Drop Dead: 4 minutes

Event Summary

This team event will be run one time with all three team members participating to rescue the hurtman. Teams have 5 minutes to set up and ask questions. The switch (cutout) feeding the transformer must be opened before any team member can touch the pole. It will be opened from the ground using an extendo stick with the operator in Class II (or higher) rubber gloves. The stick must be off the ground and the body anytime it is touching anything energized. The climber must wear rubber gloves ground to ground. Lineman will split handline and loop the hook end of handline around mannequin's legs. Then take the rope under mannequin's arms and tie three half hitches (the splice cannot be part of the knot). Once the mannequin has been tied off the climber will utilize the **provided** "OX Block" with a minimum of 1 & 1/2 wrap's or 3 clicks on the fiction bar. The mannequin can then be lowered to the ground while the third member of the team uses the bottom part of handline tied to the mannequin's legs to pull mannequin on to the tarp. You must attempt to keep the mannequin off of the pole and hardware. There will be **NO** gigs for incidental contact of the mannequin on the pole, neutral or service provided the tag man is making an honest attempt. The mannequin must land with **all** of his body on the tarp provided, and he must hit the ground gently as if it were a real person. A 10x10 tarp will be provided and placed 5' from pole centered under switch.

Event Specifications

- Time starts at judge's signal with all team members at least an arm's length from pole and extendo stick.
- Rubber gloves will be in glove bag cuffs down with no fingers protruding and bag flap closed.
- Lineman's belt and hooks will be on the ground opposite the switch side of the pole.
- Extendo stick will be lying flat on tarp fully retracted.
- All three team members must be used. One must climb, one must open switch with extendo stick wearing Class II (or higher) rubber gloves, and one must tag the mannequin.
- Mannequin must be lowered smoothly to the ground must be completely stopped within 5 feet of the ground then laid gently on the tarp. If the mannequin is not completely stopped there will be a 2-point deduction.
- Time will stop when mannequin is on the tarp with slack on the handline, and extendo stick is fully retracted and back on tarp.
- Climber will stay on pole and help hang mannequin.
- Team may assist with closing the switch back after time stops. Any team member can close it back and work gloves must be used.
- You must use the eye to open and close switch.

Continues on next page

FMEA FLORIDA MUNICIPAL ELECTRIC ASSOCIATION

KUA KISSIMMEE UTILITY AUTHORITY

2027 FLORIDA LINEMAN COMPETITION
FEBRUARY 26-27 · KISSIMMEE

JOURNEYMAN EVENT

Vertical Hurtman Rescure

Continued from previous page

- When time starts extendo stick will be lying flat on tarp and must be back on tarp fully retracted before time will stop.
- Climber must stay in 5-foot circle while he has his gaffs on or not utilizing gaff guards.
- Rubber gloves or work gloves must be worn anytime you are working or handling tools and equipment.
- You must cut the safety rope. There will be a 10-point deduction for cutting the belt in the wrong place.
- The blade of the climber's knife must not be exposed while climbing.
- Judges will use a 4" PVC conduit between the rope and the mannequin to evaluate the rope knot, the eye splice can not be in any part of the knot.
- You may use any standard knot or hitch on the mannequin's legs that can be easily removed. (Including placing the rope through the hook, but it must not come off)

Team Provides

- Extendo Stick

Judging Guidelines

This year's lineman competition will be focusing on strict safety guidelines. All rules or safety infractions will be enforced as stated in the event specs. No leniency on the stated rules will be tolerated.
The OX Blocks: A **minimum of 3 clicks or one- and one-half wraps on the friction bar** will be used. This ensures a timely but safe rescue for the fallen Lineman. This is simulating a rescue, **mannequins** hitting the ground with excessive force or **coming in contact with the pole**, will be a deduction and is at the discretion of the judge.
Mannequins: Mannequins will be tied under the arms with 3 half hitches. **Any** part of the eye splice in the knot will be a deduction. **A 4-inch pipe** will be used to ensure tightness of the knot. If the pipe can slide in-between the mannequin and the knot it is a deduction. This to ensure the fallen lineman can be safely lowered to the ground.
Insert: The Safety Belt *ROPE* insert must be **cut** during the rescue.
Stop Time: Time will stop when mannequin is on the ground and **the handline is slack.**
Climbing: One gaff must be in the pole at all times. **Belt** must be properly adjusted.
Class II Rubber Gloves: In this event **Class II Rubber Gloves are required ground to ground.**
Extendo stick: Must use Primary gloves to operate.

Note: If you accidentally cut the handline or the rescue belt, your utility will be responsible for replacing it.

Our goal is to have a safe and timely rescue for the fallen lineman. It does little good if you become a victim while doing a rescue. Please understand that all rules will be enforced to ensure safety.

SPONSORED BY:

Altec®

FMEA FLORIDA MUNICIPAL ELECTRIC ASSOCIATION

KUA KISSIMMEE UTILITY AUTHORITY

2027 FLORIDA LINEMAN COMPETITION

FEBRUARY 26-27 · KISSIMMEE

JOURNEYMAN EVENT

Vertical Hurtman Rescure

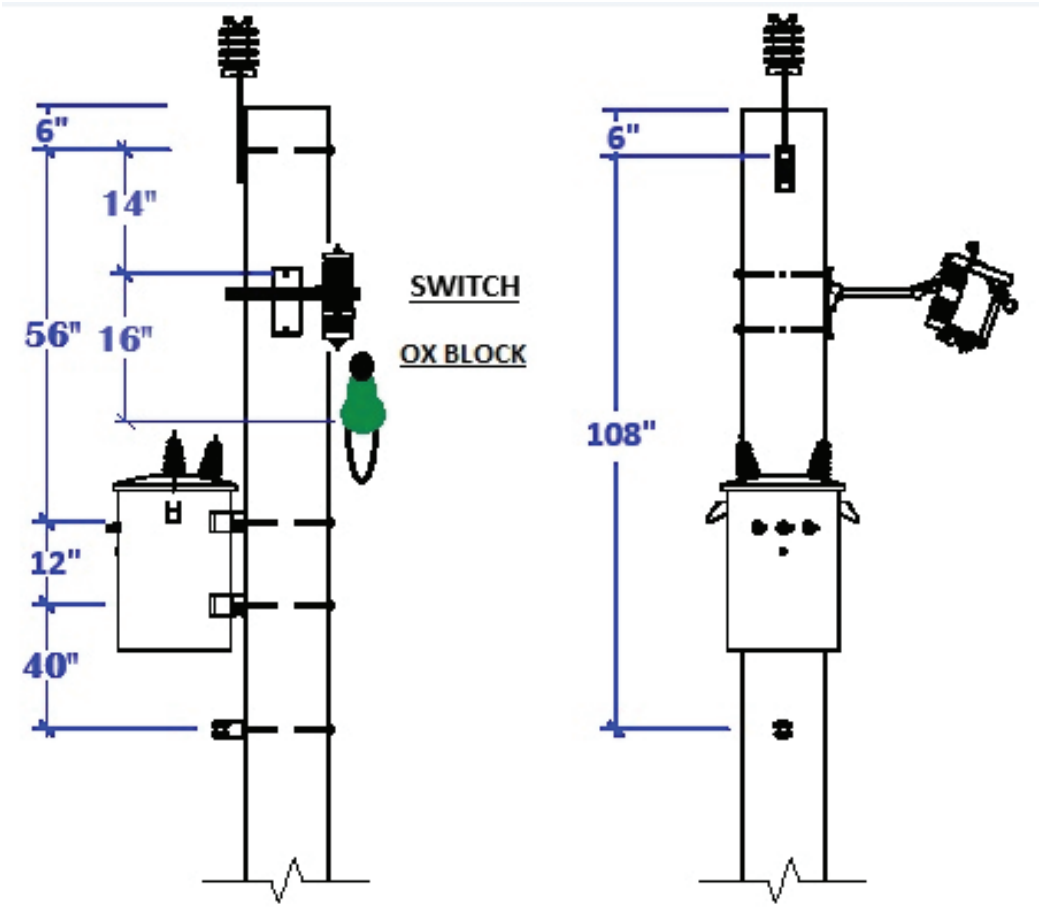

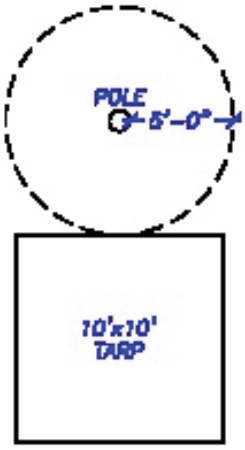

FMEA
FLORIDA MUNICIPAL ELECTRIC ASSOCIATION

KUA
KISSIMMEE UTILITY AUTHORITY

2027 FLORIDA LINEMAN COMPETITION

FEBRUARY 26-27 · KISSIMMEE

JOURNEYMAN EVENT

Vertical Hurtman Rescure





FMEA
FLORIDA MUNICIPAL ELECTRIC ASSOCIATION

KUA
KISSIMMEE UTILITY AUTHORITY

2027 FLORIDA LINEMAN COMPETITION

FEBRUARY 26-27 · KISSIMMEE

JOURNEYMAN EVENT

4 Kv Jumper Replacement

Chief Judge: Josh Helton — City of Tallahassee

Co-Chief: Bobby Robison — Talquin Electric Cooperative, Inc.

Mean time: 6 minutes

Drop Dead: 9 minutes

Event Summary

Teams will replace the jumper on a double dead end framed pole. The two phase conductors will be #2 aluminum and the jumper will be poly coated #4 copper. The phase of the jumper that is being changed will need to be macked out before the old jumper is removed. Tonka toy insulator must be tightened back after new jumper is installed.

Event Specifications

- Team will have 5 minutes to set up, and all tools be laid out on a competitor supplied tarp in the designated work area.
- Time starts at the judges signal with fall arrest system detached from the pole.
- The 60" jumper must be skinnned, brushed, and hot line clamps attached after the event time starts.
- Neutral may be floated.
- Jumper will be attached to cross arm using a tonka toy type insulator, insulator must be tightened back after the new jumper is installed.
- All permanent and temporary attachments must be brushed.
- MAD must be maintained at all times.
- A mechanical tool must be used to tighten hot line clamps and tonka toy bolts. [screwdriver, wrench, stick etc.]
- Time will stop when the work is complete and the last climber makes contact with the ground

Materials Provided

- FDA crossarm, 8'
- 2 - Vice Top Insulator [Hendrix HPl-25VTC-01]
- 4 - Insulator, Polymer
- 4 - Deadend, Straightline, Stirrup Clamp
- 4 Hot Line Clamp [Hubbell BC2/0]
- 1 Single Upset Bolt
- 1 Spool Insulator
- 2 ACSR
- 60" of #4 CU Poly Insulated

Team Provides

- P.P.E.
- Climbing Gear
- Handline
- All tools required to complete this task safely
- Tarp

FMEA Florida Municipal Electric Association

KUA Kissimmee Utility Authority

2027 FLORIDA LINEMAN COMPETITION

FEBRUARY 26-27 · KISSIMMEE

JOURNEYMAN EVENT

4 Kv Jumper Replacement

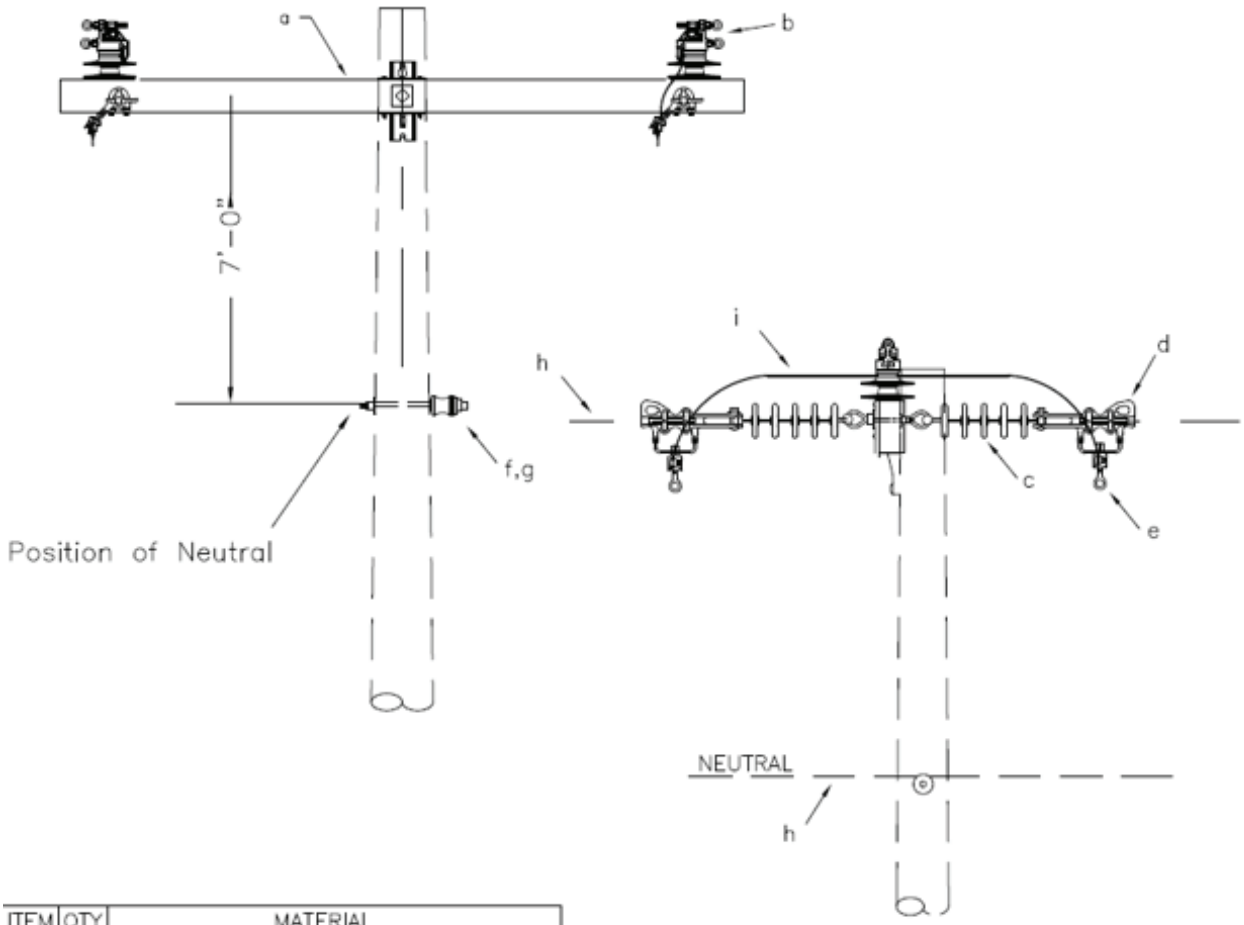

ITEM	QTY	MATERIAL
a	1	FDA Crossarm, 8'
b	2	Vice Top Insulator (Hendrix HPI-25VTC-01)
c	4	Insulator, Polymer
d	4	Deadend, Straightline, Stirrup Clamp
e	4	Hot Line Clamp (Hubbell BC2/0)
f	1	Single Upset Bolt
g	1	Spool Insulator
h		#2 ACSR
i		#4 Poly Insulated

FMEA FLORIDA MUNICIPAL ELECTRIC ASSOCIATION

KUA KISSIMMEE UTILITY AUTHORITY

2027 FLORIDA LINEMAN COMPETITION

FEBRUARY 26-27 · KISSIMMEE

JOURNEYMAN EVENT

Journeyman Mystery Event

Chief Judge: Richard Boley OUC The Reliable One

Co-Chief: Austin Houk OUC The Reliable One

Mean time: ? minutes

Drop Dead: ? minutes

Event Summary

Event summary will be provided to competors at event check-in.

Event Specifications

Event specifications will be provided to competors at event check-in.

SPONSORED BY:

RONIN®

CHANCE®

LINEMAN GRADE TOOLS™

FMEA FLORIDA MUNICIPAL ELECTRIC ASSOCIATION

KUA KISSIMMEE UTILITY AUTHORITY

2027 FLORIDA LINEMAN COMPETITION
FEBRUARY 26-27 · KISSIMMEE

TEAM EVENT

Mutual Aid

Chief Judge: Billy White KUA Kissimmee Utility Authority

Mean time: ? minutes
Drop Dead: ? minutes

Event Summary

This event will represent mutual aid storm restoration. Each team will be composed of two apprentices and one journeyman, all three from different companies. The apprentices must climb and the journeyman must be thegroundman. This is a MANDATORY event and failure to participate will result in the APP and/or JM team to receive a 10-point deduction to start their competition day (unless signed off on by both Master Judges).

Event Specifications

- You must be at your assigned event station at 8am ready to compete
- Time will start on Master Judge's signal (Shotgun style start)
- May only use provided hand tools
- Competitors use their personal PPE, climbing gear and handline (all other equipment and tools provided)

SPONSORED BY:

Milwaukee®

HASTINGS
A WORLDWIDE SUPPLIER OF
Hot Line Tools & Equipment

FMEA
FLORIDA MUNICIPAL ELECTRIC ASSOCIATION

KUA Kissimmee Utility Authority